3" X 4" CORRUGATED "A" STYLE ELBOW

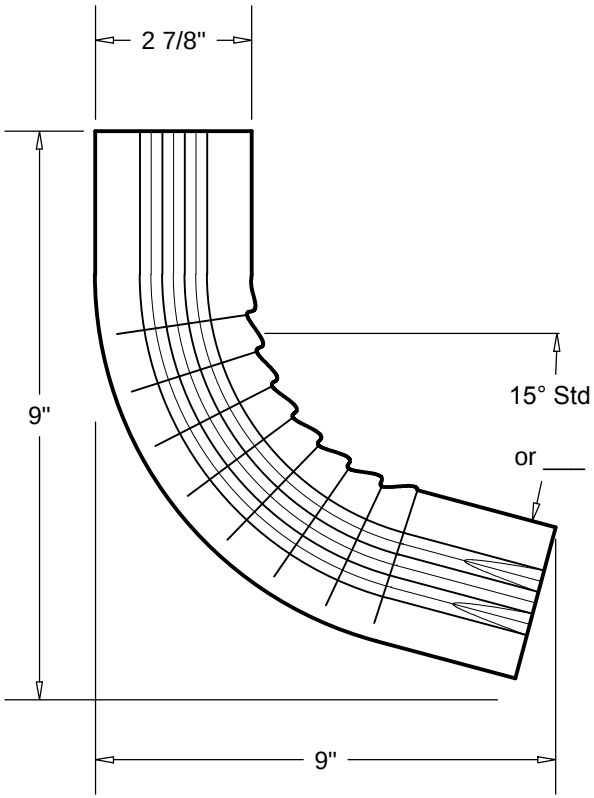

SIDE VIEW

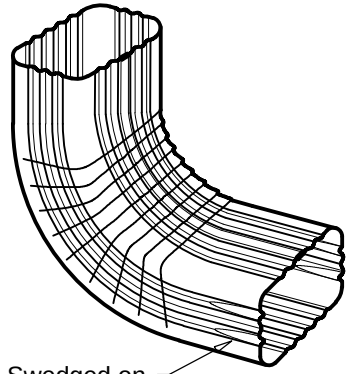

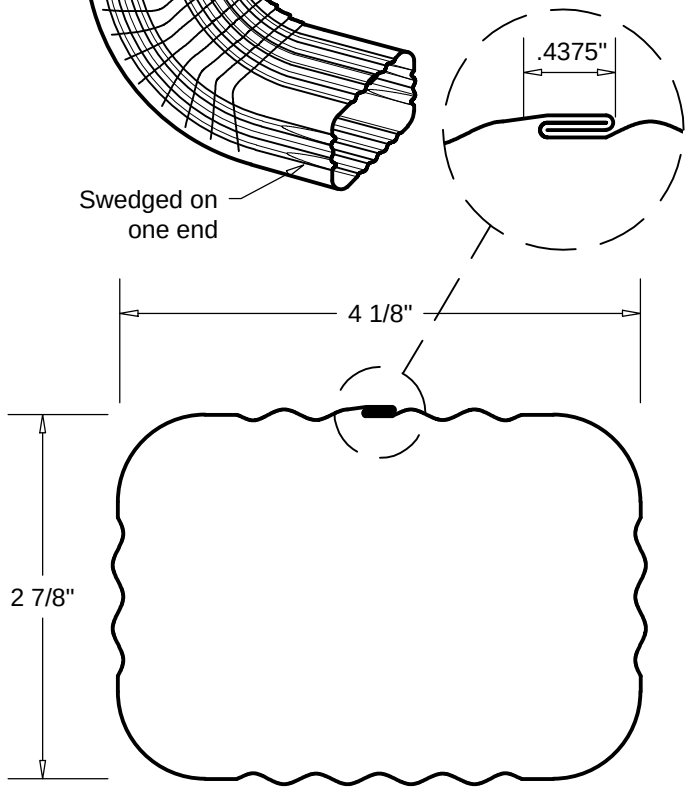

PRINT APPROVED BY:

_____ (SIGNATURE) _____ (DATE)

A SIGNED PRINT APPROVAL SIGNIFIES A CUSTOMER HAS VERIFIED ALL DIMENSIONS, SIZES, QUANTITIES, AND MATERIAL TYPES.

FABRICATION WILL PROCEED ONLY AFTER RECEIPT OF SIGNED PRINT APPROVAL

MATERIAL:

- ☐ 29GA GALV. STEEL
- ☐ 26GA GALV. STEEL
- ☐ 24GA GALV. STEEL
- ☐ .032" ALUMINUM
- ☐ 16OZ COPPER
- ☐ 20OZ COPPER

COLOR:_____

QUANTITIES:

_____ TOTAL PCS

NOTES:

1. ALL FASTENERS SUPPLIED BY OTHERS.
2. UNLESS OTHERWISE NOTED, FABRICATION OF MITERS AND ACCESSORIES ARE FURNISHED STANDARD USING PRE-PAINTED RIVETS, THEN CAULKED.

PROJECT INFORMATION:

_____ (PROJECT NAME)

_____ (ARCHITECT)

_____ (CUSTOMER)

_____ (REPRESENTATIVE/ DISTRIBUTOR)

DATE: _____ SHEET _____ OF _____

RDCA
ROOF DRAINAGE COMPONENTS & ACCESSORIES

Roof Drainage Components & Accessories
60 Don Westbrook Ave.,North
Jasper, GA 30143
Phone: 706-692-7333
Fax: 706-692-7335
Email: sales@rdcaa.com